INTERCOAX
2MP Bullet Camera

IXBA-2F-RS-EOC

B-Linx™ EoC Protocol

◢ Features

- 1/2.8" Sony IMX 307 CMOS
- 2MP resolution 1920 x 1080P output
- Low illumination 0.1Lux
- Day/Night (ICR), AWB, 2D/3D-DNR, IR-CUT
- D-WDR, Motion Detection, Privacy Mask, Mirror, Flip
- RTSP and Onvif 17.06 compatible
- H.265/H.264 dual-stream media server
- Audio Detection
- 20PCS IR Leds, IR distance 30~40 meters
- 3.6mm fixed lens
- Ethernet over Coax communication following IEEE1901 Standard
- Ethernet over Coax communication following ETSI TS 105 176 Standard
- Data + Power over Coax cable
- Data distance up to 2.4Km
- PoE distance up to 1.2Km

◢ Dimension

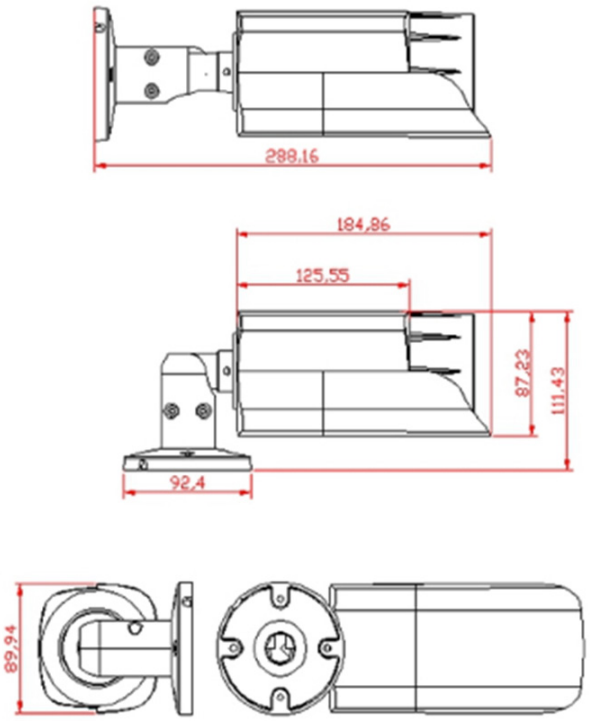

◢ Specification

IXBA-2F-RS-EOC	
Image Sensor	1/2.8" Sony IMX 307 CMOS
Effective Pixels	1936(H)×1096 (V)
Electronic Shutter	AUTO, 1/25s ~ 1/100000s
Min. Illumination	0.01Lux@F1.2(AGC ON), 0Lux IR on
Day/Night	Auto/Color/(B/W)/Timing
Video Standard	H.264/H.265
Video Resolution	Main stream: 1080P@30fps, 720P@30fps Sub stream: VGA@ 360P/CIF@25fps, etc.
Video Bitrates	500Kbps - 6Mbps, VBR/CBR
Audio Standard	G.711-u/G.711-a
IR Led	20PCS IR Leds, IR distance 30~40 meters
Focal length	3.6mm fixed lens
Network Port	BNC-Ethernet over Coax, 100Mbps, POE
Power Consumption	< 7 W
Operating Temp.	-30℃-(+60)℃, 10%-90%RH

INTERCOAX NETWORK
[주] 인터코엑스

(우)14056 경기도 안양시 동안구 학의로 250 관양두산벤처다임 510호

TEL : +82-31-365-3133
FAX : +82-31-365-3135
E-mail: info@intercoax.com